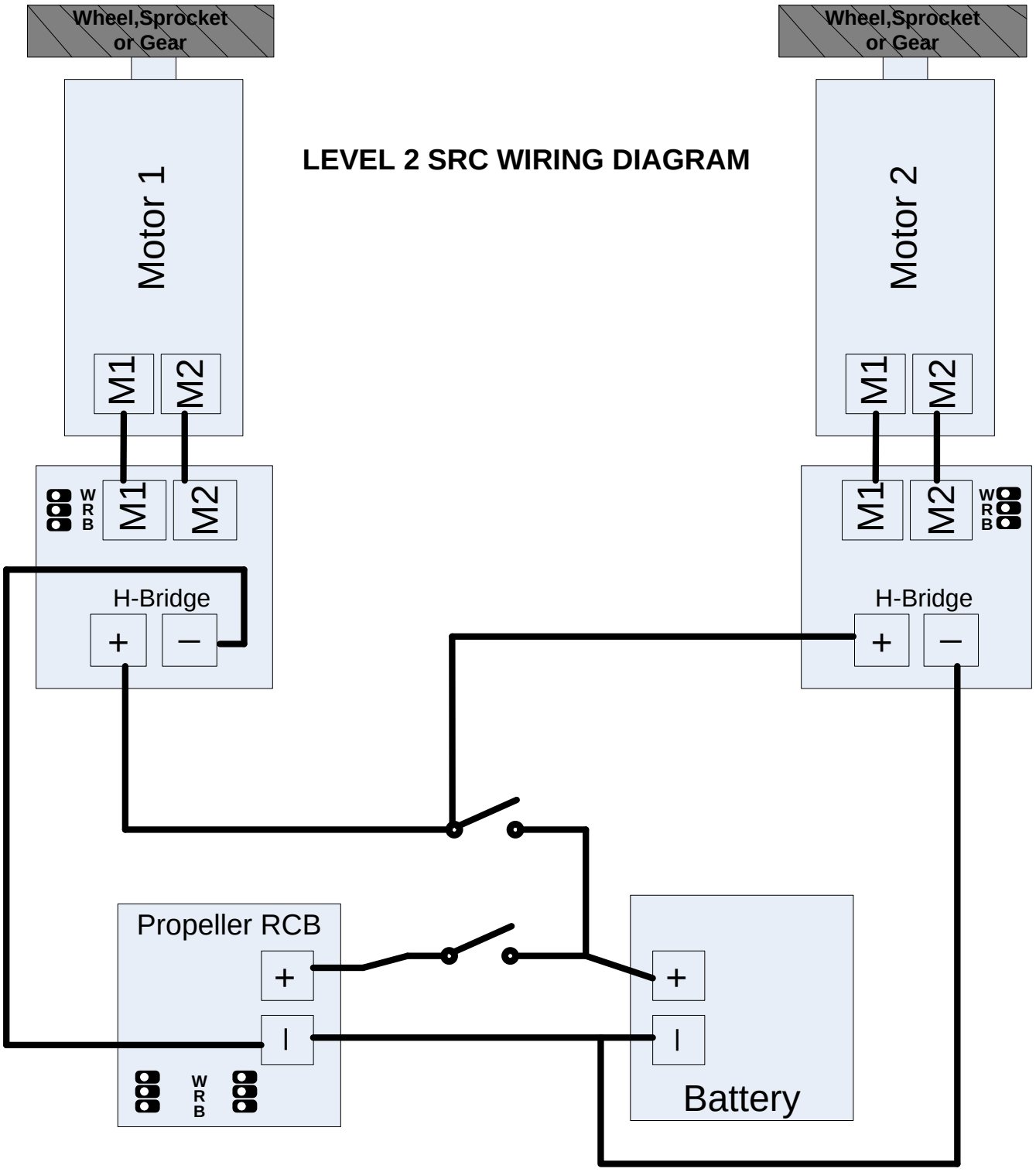LEVEL 2 SRC WIRING DIAGRAM